第二章 半导体中的电子状态（有关能带结构的重要概念）

主要参考文献：

《The Physics of Semiconductors》， M. Grundmann， Springer

《The Materials Science of Semiconductors》， A. Rockett, Springer

…….

提　纲

■ 1. 带隙（能隙、禁带宽度）

- ➢ 带隙的理论与实验确定方法
- ➢ 直接带隙半导体、间接带隙半导体
- ➢ 带隙随温度的变化（温度系数）
- ➢ 半导体合金

■ 2. 能带工程

■ 3. 有效质量

一、 能带图像表示及确定方法

1.1 能带图像的表示方法

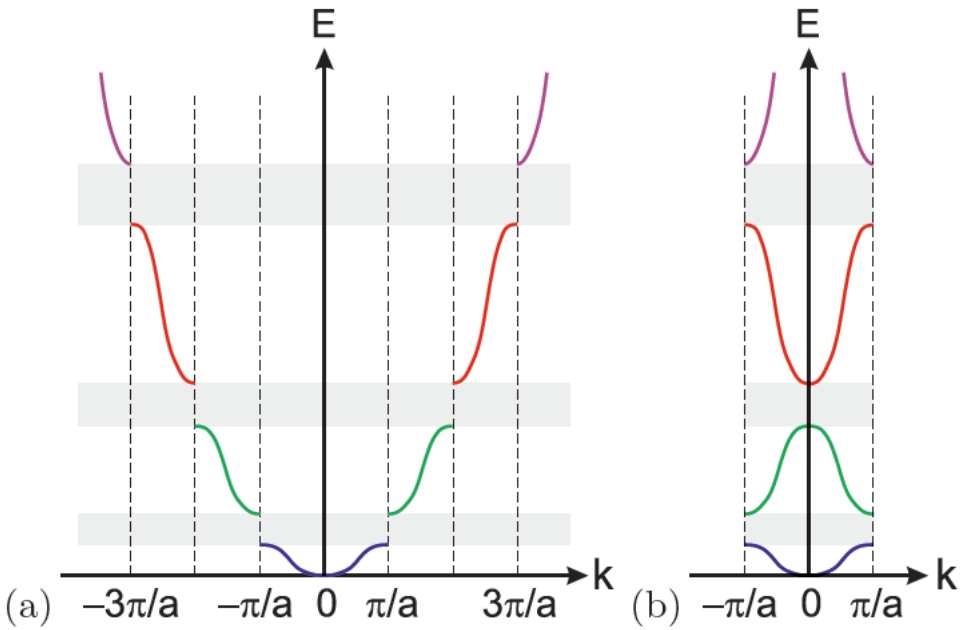

Zone schemes for a band structure: (**a**) extended, (**b**) reduced

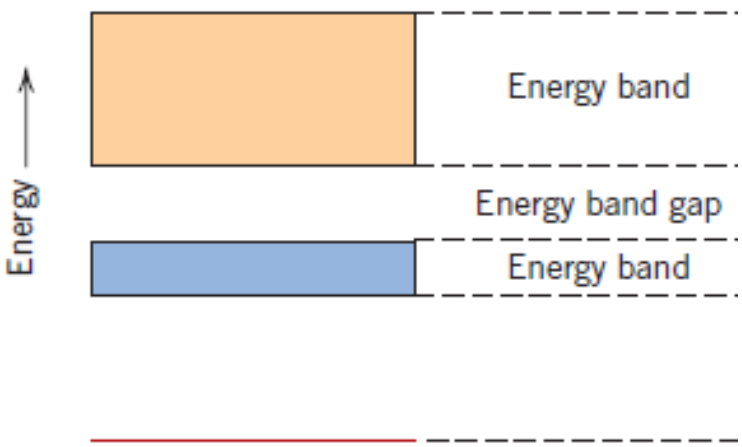

The conventional representation of the electron energy band structure

一、 能带图像表示及确定方法

1.1 能带图像的理论及实验研究方法

- 理论预测（模拟）方法

  - 理论计算方法：第一性原理计算（从头计算）、linear combination of atomic orbitals (LCAO) approach
  - 采用商用的软件包：VASP，DFT，LDA
  - 自己发明计算程序

- 实验研究方法

  - 光谱技术：光吸收谱、荧光光谱
  - 角分辨光电子能谱技术：UPS；ARPES（ Angle resolved photoemission spectroscopy ）

金属、半导体和绝缘体的能带图像

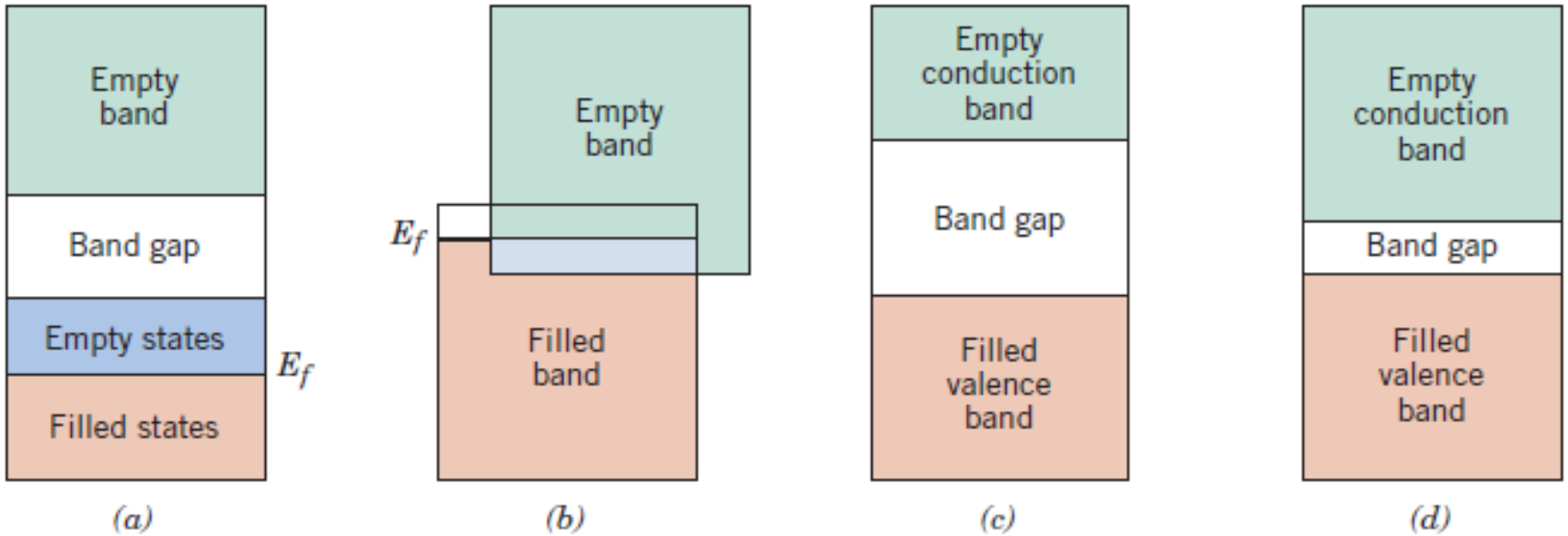

Figure 18.4 The various possible electron band structures in solids at 0 K. (*a*) The electron band structure found in metals such as copper, in which there are available electron states above and adjacent to filled states, in the same band. (*b*) The electron band structure of metals such as magnesium, wherein there is an overlap of filled and empty outer bands. (*c*) The electron band structure characteristic of insulators; the filled valence band is separated from the empty conduction band by a relatively large band gap (>2 eV). (*d*) The electron band structure found in the semiconductors, which is the same as for insulators except that the band gap is relatively narrow (<2 eV).

金属和半导体中电子受到激发能带图像

Figure 18.5 For a metal, occupancy of electron states (*a*) before and (*b*) after an electron excitation.

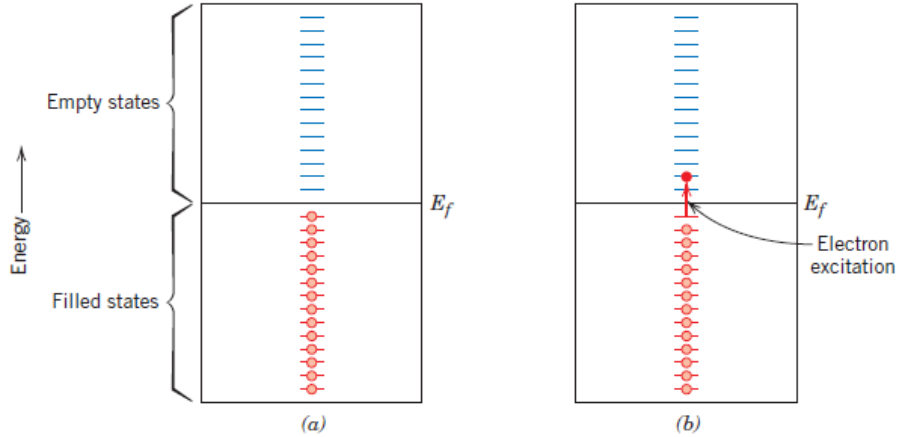

实验现象？

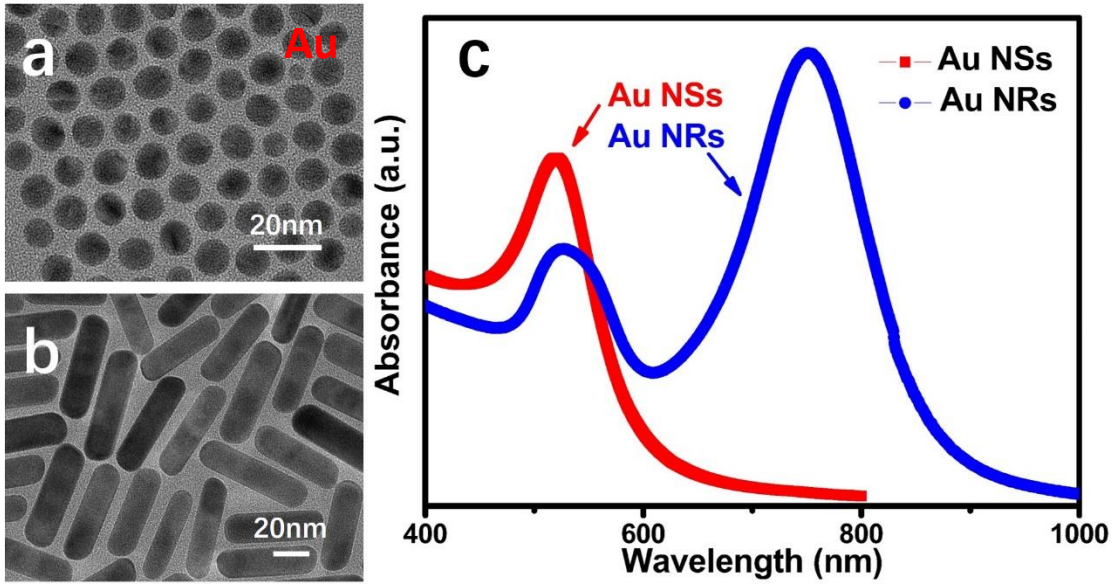

金属和半导体中电子受到激发能带图像

Figure 18.6 For an insulator or semiconductor, occupancy of electron states (*a*) before and (*b*) after an electron excitation from the valence band into the conduction band, in which both a free electron and a hole are generated.

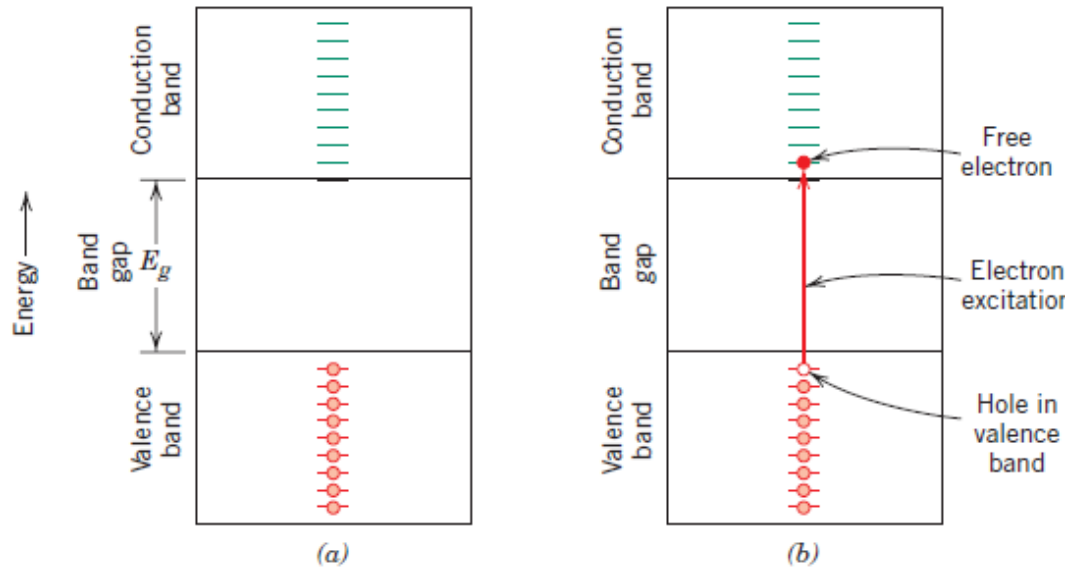

实验现象？

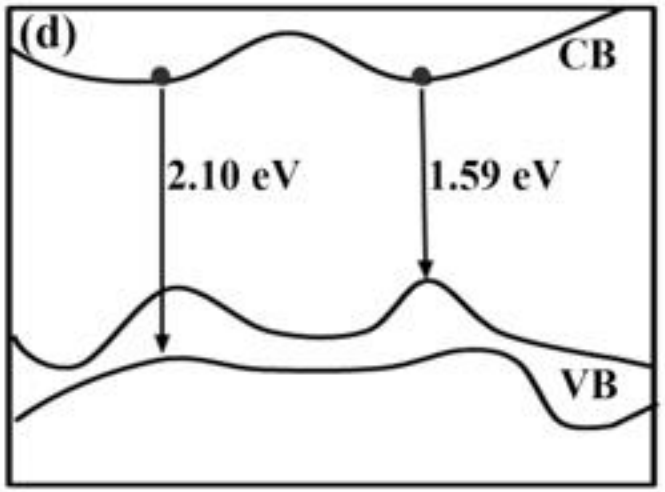

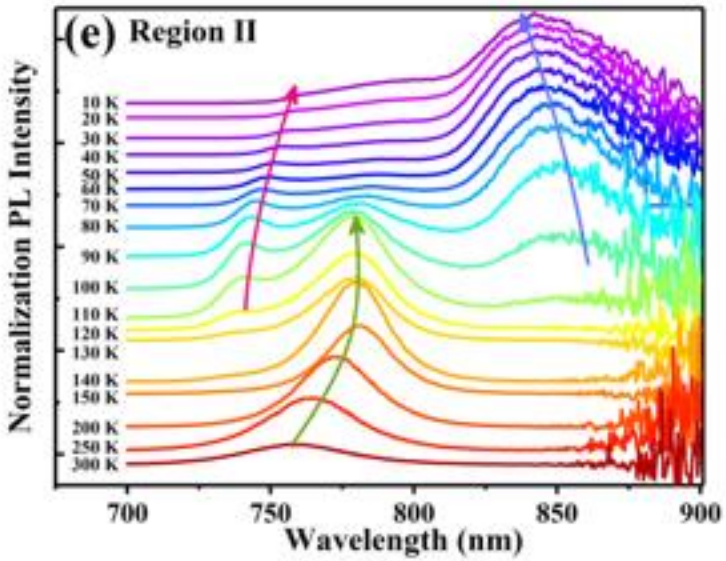

1.2 直接带隙半导体与间接带隙半导体

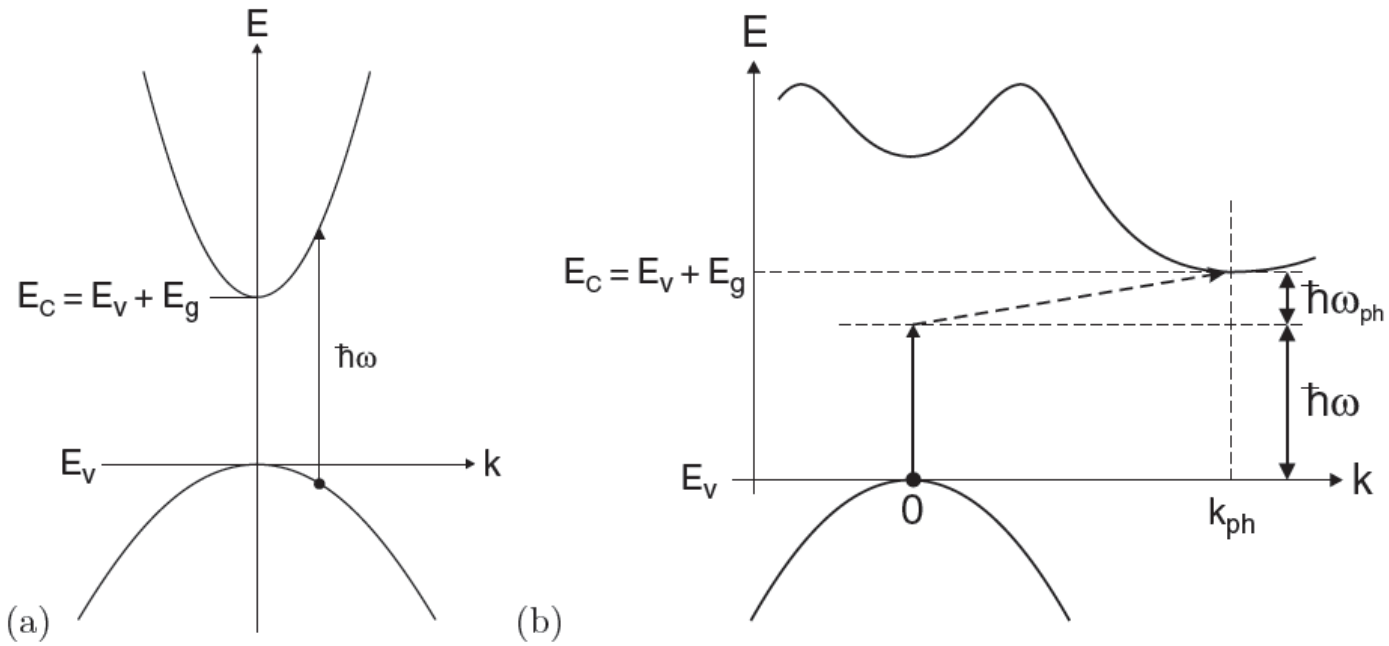

Fig. 9.6. (**a**) Direct optical transition and (**b**) indirect optical transitions between valence and conduction bands. The photon energy is $\hbar\omega$. The indirect transition involves a phonon with energy $\hbar\omega_{\mathrm{ph}}$ (here: phonon absorption) and wavevector k_{ph}

- 理论计算结果：导带~价带极值位置有区别
- 光跃迁不同
- 用途不同

典型半导体的能带图E(K)

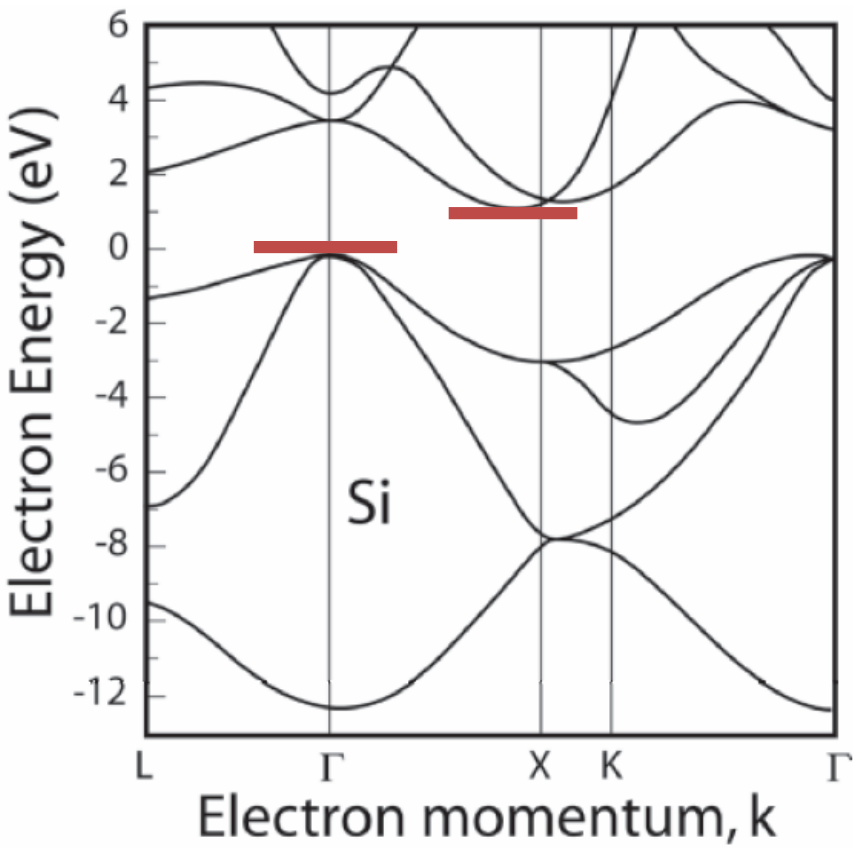

间接带隙半导体

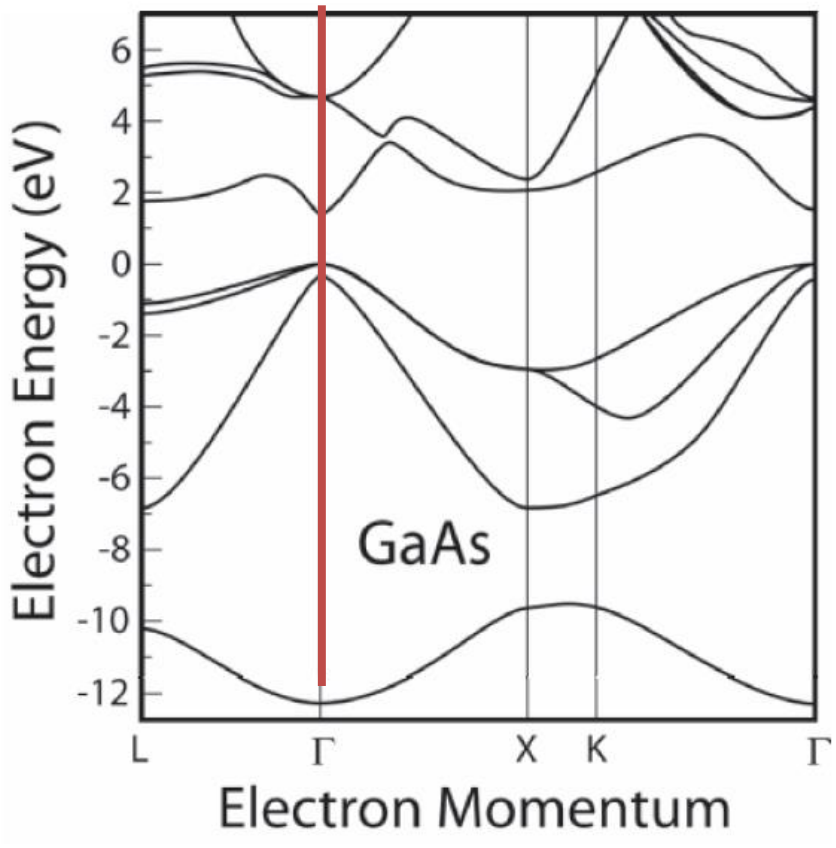

直接带隙半导体

1.3 带隙的实验确定方法：光吸收谱(Abs)

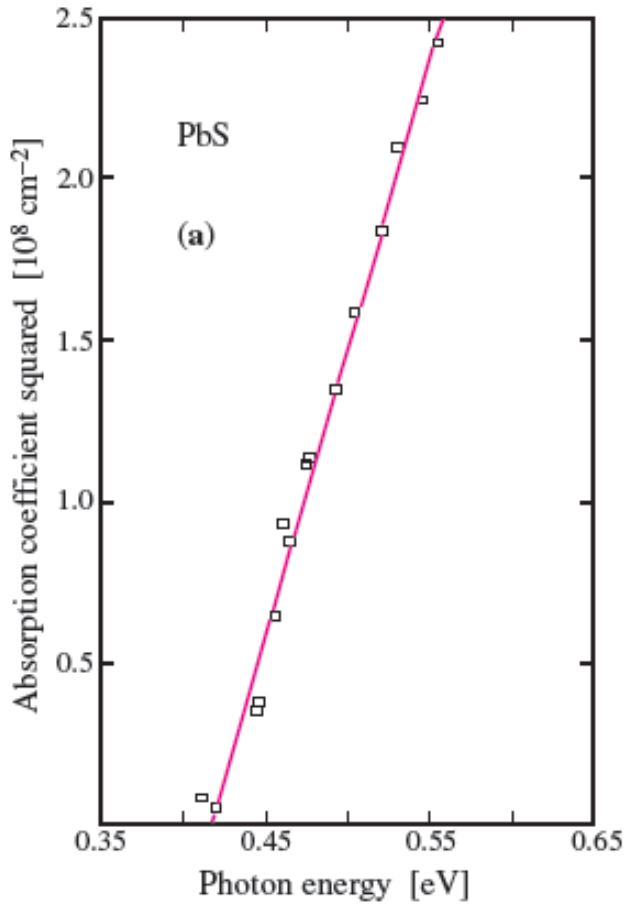

- Plot of the square of the absorption coefficient of PbS as a function of photon energy showing the linear behavior
- The intercept with the *x*-axis defines the direct energy gap

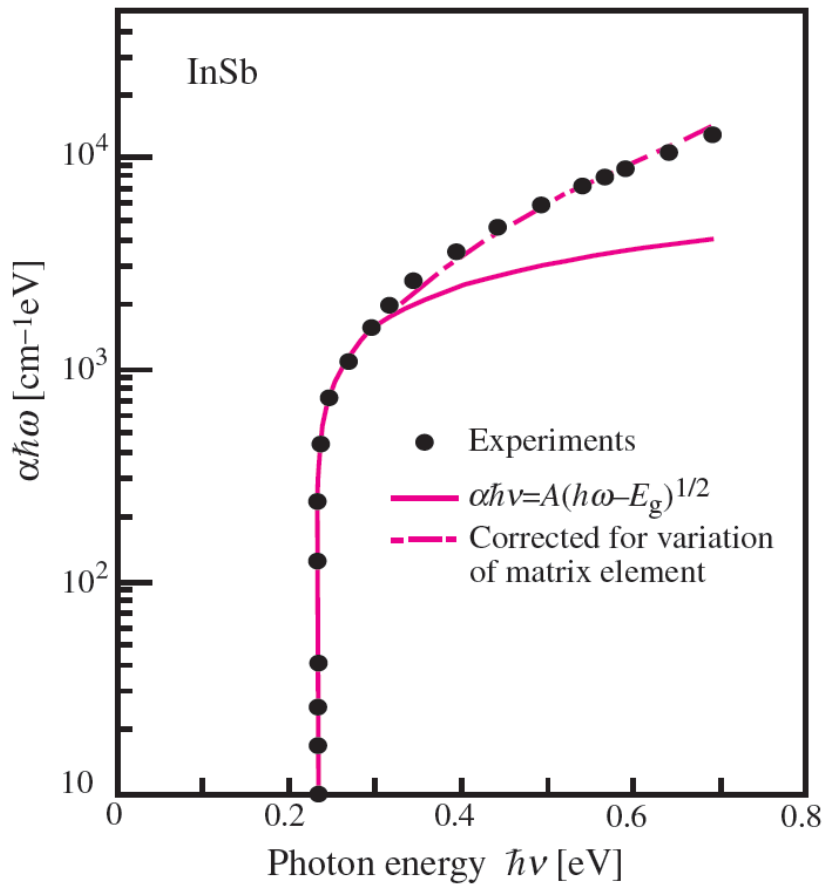

- Semilogarithmic plot of the absorption coefficient of InSb at 5 K as a function of photon energy. The *filled circles* represent experimental results.
- The intercept with the *x*-axis gives the direct bandgap of InSb

1.3 带隙的实验确定方法：光吸收谱(Abs)

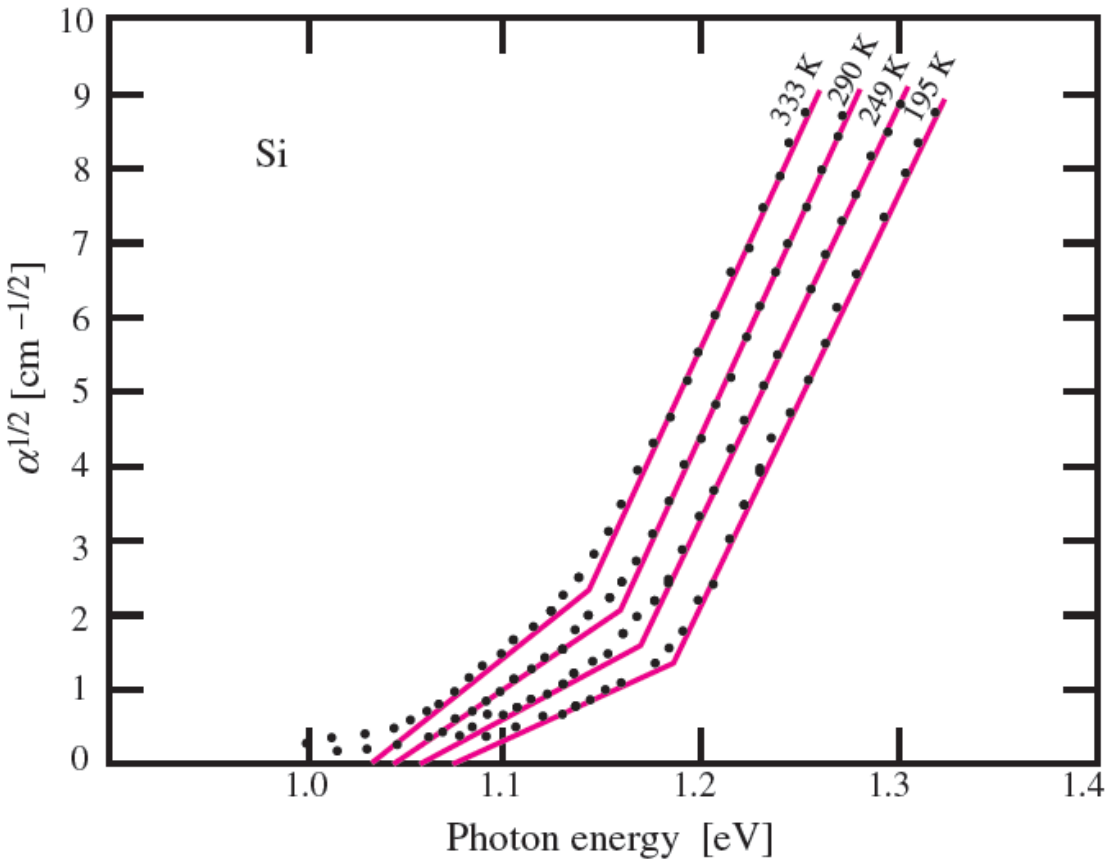

Fig. 6.17. Plots of the square root of the absorption coefficients of Si versus photon energy at several temperatures. The two segments of a straight line drawn through the experimental points represent the two contributions due to phonon absorption and emission [6.33]

1.3 带隙的实验确定方法：光致发光谱(PL)

Emission spectrum

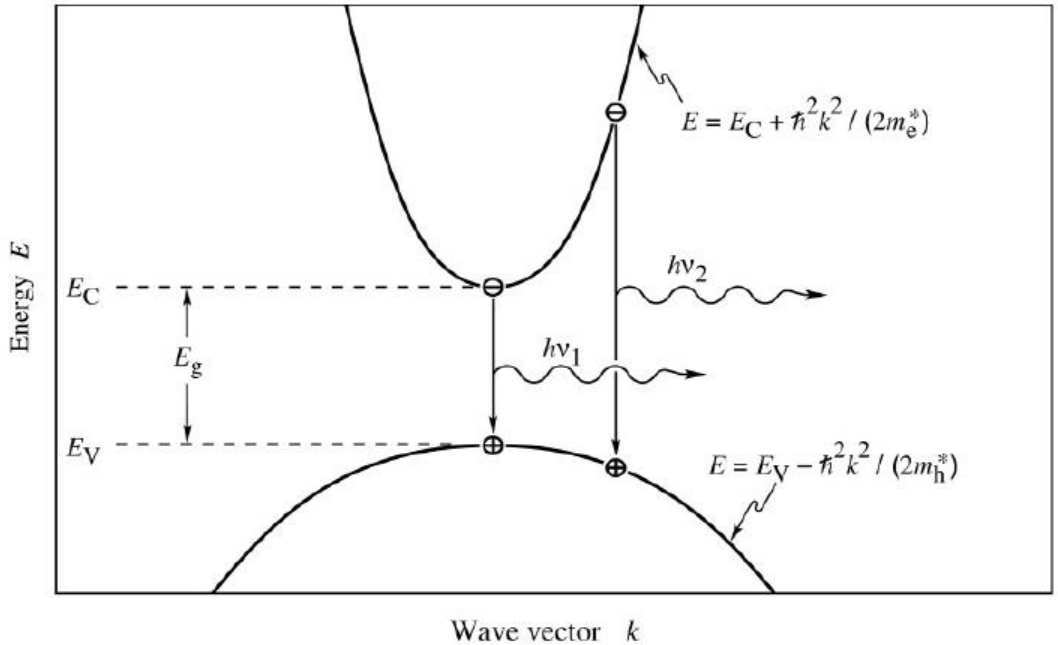

Fig. 5.1. Parabolic electron and hole dispersion relations showing "vertical" electron-hole recombination and photon emission.

- Electron and hole momentum must be conserved
- Photon has negligible momentum

1.3 带隙的实验确定方法：光致发光谱(PL)

Emission spectrum

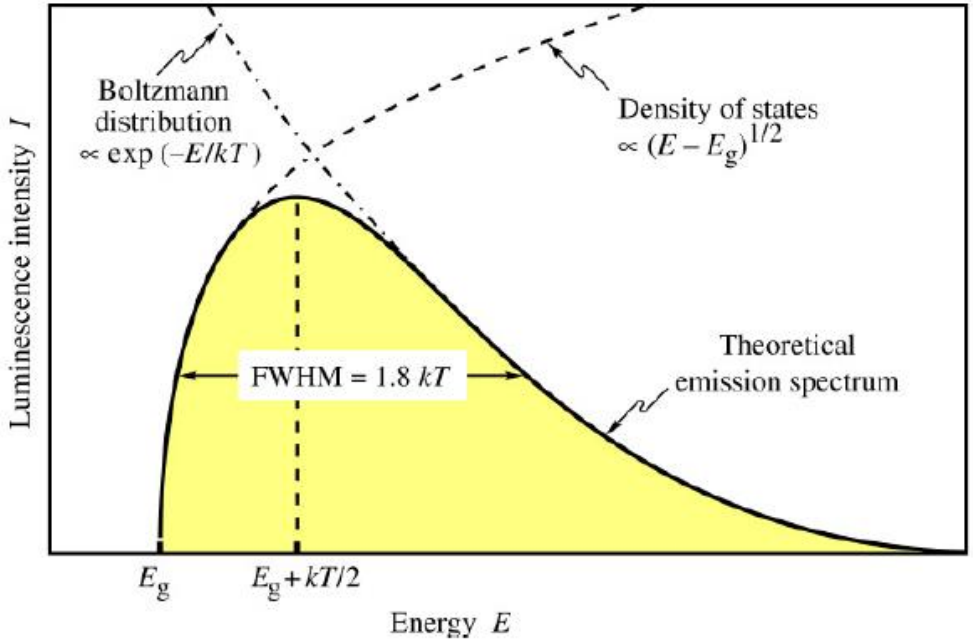

Fig. 5.2. Theoretical emission spectrum of an LED. The full width at half maximum (FWHM) of the emission line is 1.8 kT.

$$I_{PL}(\hbar\omega) \propto \begin{cases} (\hbar\omega - E_g)^{1/2} \exp[-(\hbar\omega - E_g)/(k_B T)] & \text{for } \hbar\omega > E_g, \\ 0 & \text{otherwise,} \end{cases}$$

$$E = E_g + \frac{1}{2} kT$$ Energy of maximum emission intensity

$$\Delta E = 1.8\ kT$$ Spectral width

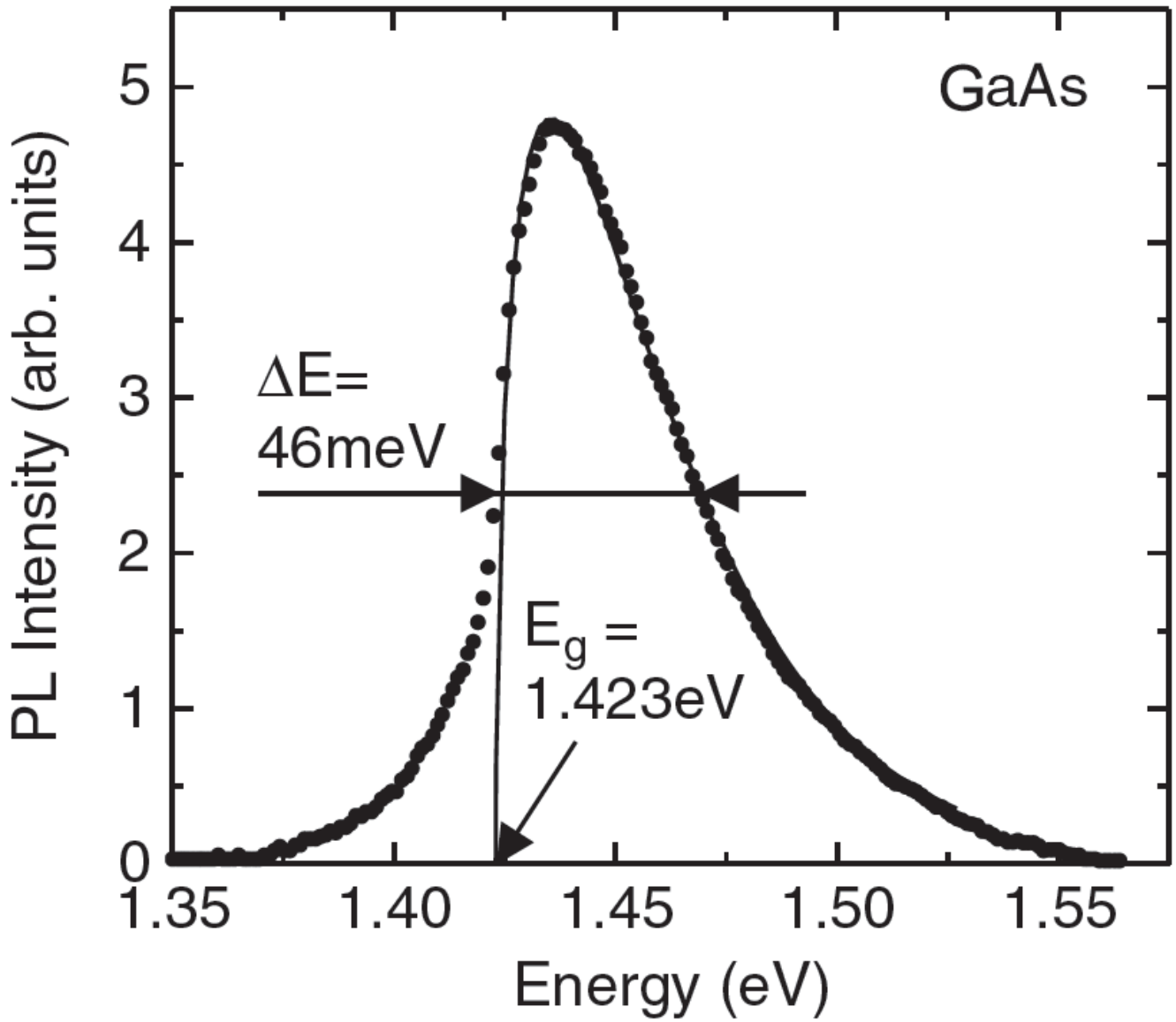
GaAs
ΔE=
46meV
E_g =
1.423eV
PL Intensity (arb. units)
Energy (eV)
0
1
2
3
4
5
1.35
1.40
1.45
1.50
1.55

1.3 带隙的实验确定方法：光致发光谱(PL)

□ 间接带间复合（不对应带隙）

• In indirect bandgap semiconductors, such as Si and Ge, e-h pairs can recombine radiatively only via phonon-assisted transitions (声子辅助).

• Since the probability of these transitions is smaller than for competing nonradiative processes, these materials are not efficient emitters（发光效率很低，通常不发光）. GaP is an exception.

• There is much ongoing effort to make Si a more efficient emitter of light by fabricating Si into the form of nanometer-size crystallites known as *nanocrystals. It is argued that by physically confining electrons and holes* one can enhance their radiative recombination rate.

• One such technique involves the use of electrolysis to produce a spongy form of Si known as *porous Si*（多孔硅）. Unlike bulk Si, *porous Si has been shown to produce efficient visible photoluminescence and electroluminescence*. The reasons for this increased emission efficiency in porous Si are, however, still controversial .

1.3 能带结构的实验确定方法：紫外光电子能谱(UPS)

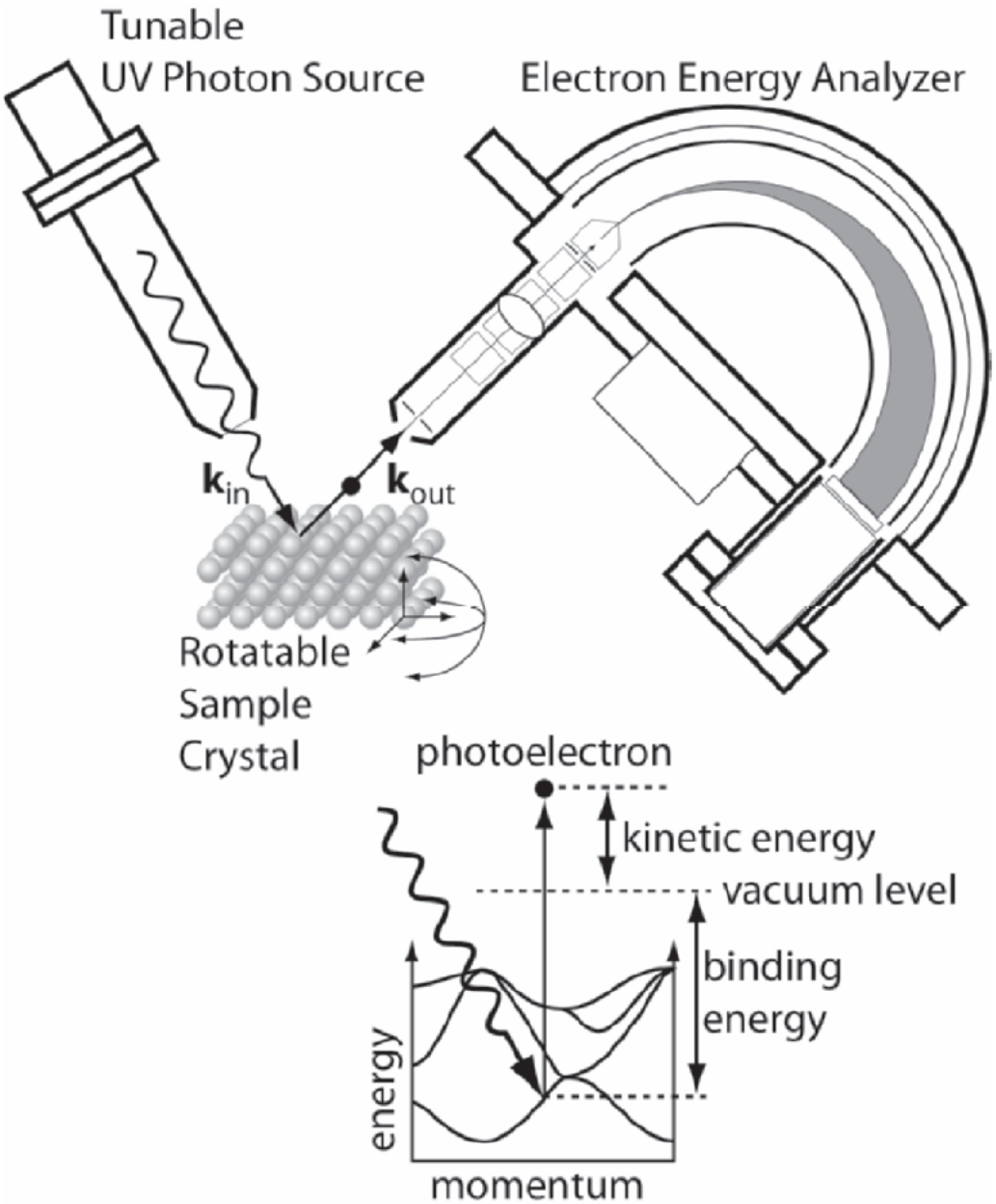

- A schematic diagram of the photoemission process used to determine the structure of valence band as a function of electron wavevector.
- **The incident photon has a** well-defined momentum $\mathbf{k_{in}}$ **and the photoelectron has an outgoing wave vector** $\mathbf{k_{out}}$**.**
- For an energy and momentum conserving process the initial energy and momentum of the electron can be determined, from which the band energy is known.

例子：GaAs

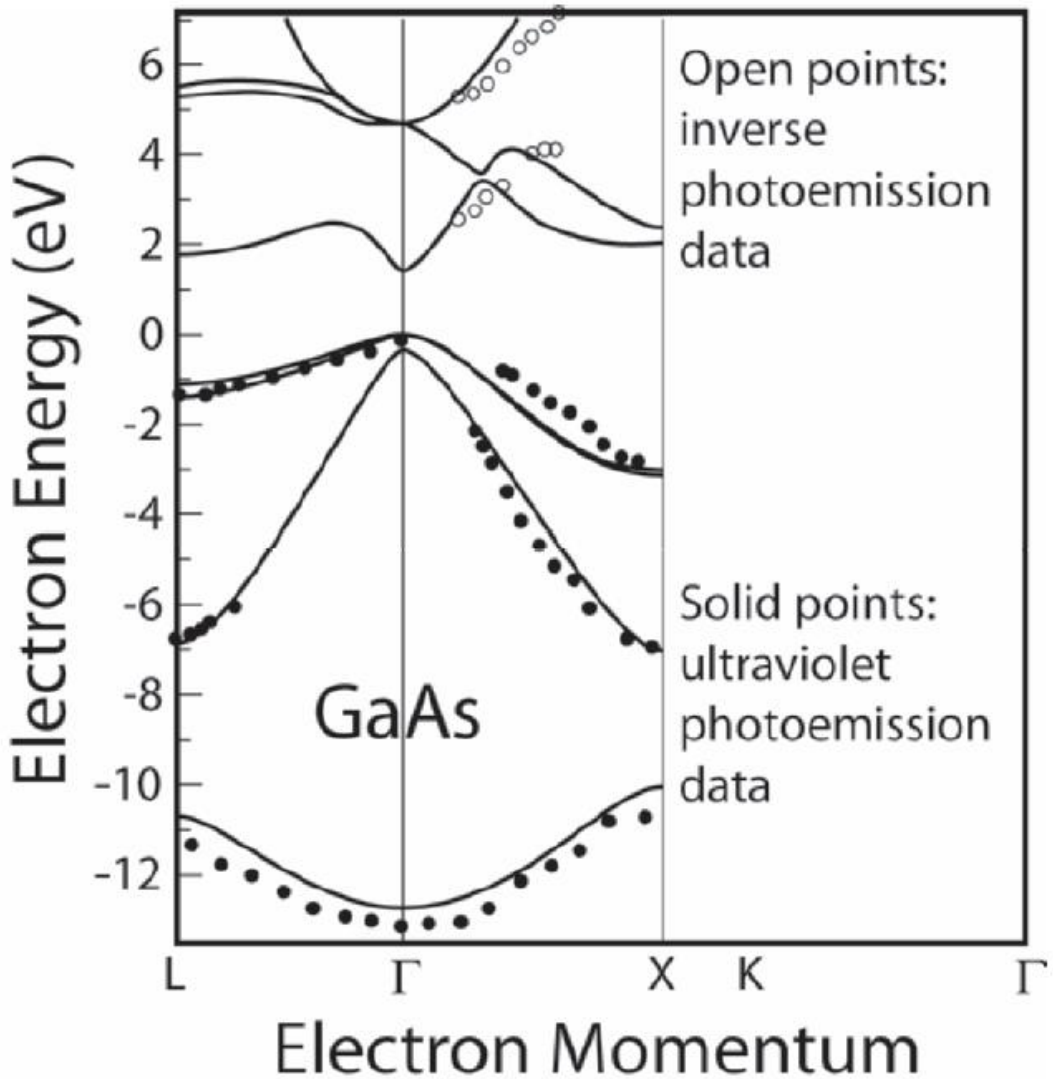

仔细分析导带、价带的数据特点！

Figure 5.14: Experimental determination of a portion of the GaAs band structure as a function of electron momentum (points) by Ortega and Himpsel. [7] Also the calculation by Chelikowski and Cohen [5] (curves) for the band structure of GaAs. The agreement is excellent for the

1.4 Temperature Dependence Of The Band gap* (2.4.3)

$$\Delta E_g = E_g(T) - E_g(0)$$

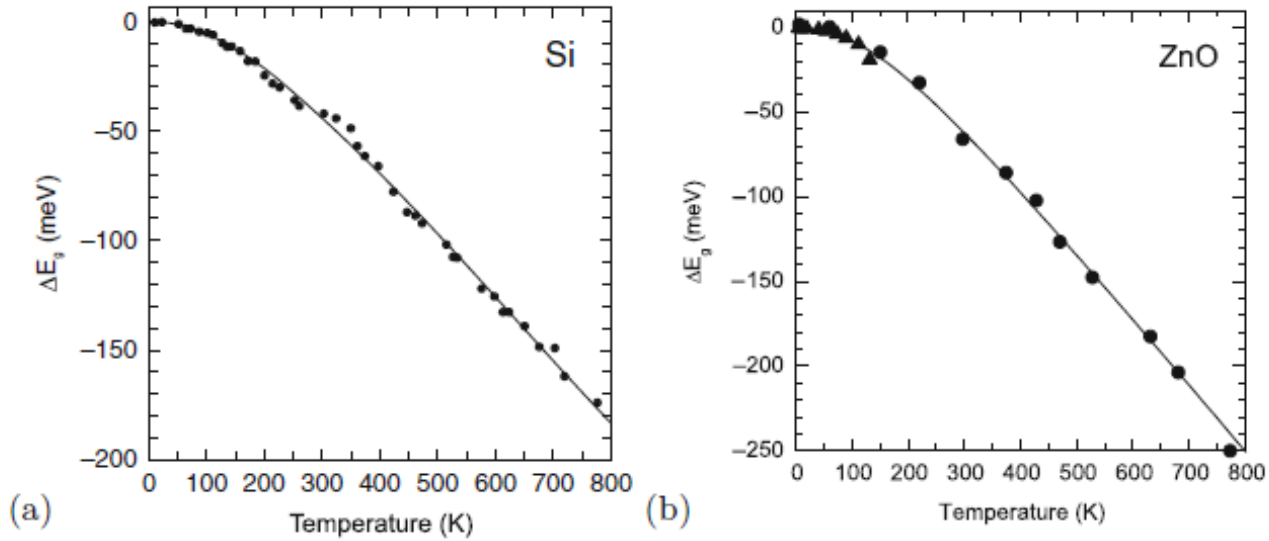

Fig. 6.20. Temperature dependence of the band gap of (a) Si (data from [331]) and (b) ZnO (experimental data from photoluminescence (*triangles*) and ellipsometry (*circles*)). The *solid lines* are fits with (6.33) and the parameters given in Table 6.3

- 带隙随温度升高而变小
- The reasons for this are the change of electron–phonon interaction and the expansion of the lattice.

**** M. Grundmann, The physics of semiconductors***

For many semiconductors the temperature dependence can be described with the empirical, three-parameter Varshni formula [332],

$$E_g(T) = E_g(0) - \frac{\alpha T^2}{T+\beta}\,, \tag{6.31}$$

（课本，P. 40）

where $E_g(0)$ is the band gap at zero temperature. A more precise and physically motivated formula (based on a Bose–Einstein phonon model) has been given in [333]

$$E_g(T) = E_g(0) - 2\,\alpha_B\,\Theta_B\left[\coth\left(\frac{\Theta_B}{2T}\right) - 1\right]\,, \tag{6.32}$$

where α_B is a coupling constant and $k\Theta_B$ is a typical phonon energy; typical values are given in Table 6.3. This model reaches a better description of the fairly flat dependence at low temperatures. However, experimentally the dependence at low temperatures is rather quadratic.

The more elaborate model of [334] takes into account a more variable phonon dispersion, including optical phonons, and proposes the four-parameter formula

$$E_g(T) = E_g(0) - \alpha\,\Theta\left[\frac{1-3\Delta^2}{\exp(2/\gamma)-1} + \frac{3\Delta^2}{2}\left(\sqrt[6]{1+\beta}-1\right)\right] \tag{6.33}$$

$$\beta = \frac{\pi^2}{3(1+\Delta^2)}\gamma^2 + \frac{3\Delta^2-1}{4}\gamma^3 + \frac{8}{3}\gamma^4 + \gamma^6$$

$$\gamma = 2T/\Theta\,,$$

where α is the high-temperature limiting magnitude of the slope (of the order of several 10^{-4} eV/K), Θ is an effective average phonon temperature and Δ is related to the phonon dispersion (typically between zero (Bose–Einstein model) and 3/4).

Table 6.3. Parameters for the temperature dependence of the band gap (6.32) and (6.33) for various semiconductors

	α (10^{-4} eV/K)	Θ (K)	Δ	α_B (10^{-4} eV/K)	Θ_B (K)
Si	3.23	446	0.51	2.82	351
Ge	4.13	253	0.49		
GaAs	4.77	252	0.43	5.12	313
InP	3.96	274	0.48		
InAs	2.82	147	0.68		
ZnSe	5.00	218	0.36		
ZnO	3.8	659	0.54		

- 半导体的带隙随温度变化理论，在光谱分析中有重要应用！

例外：带隙随温度升高而增大。

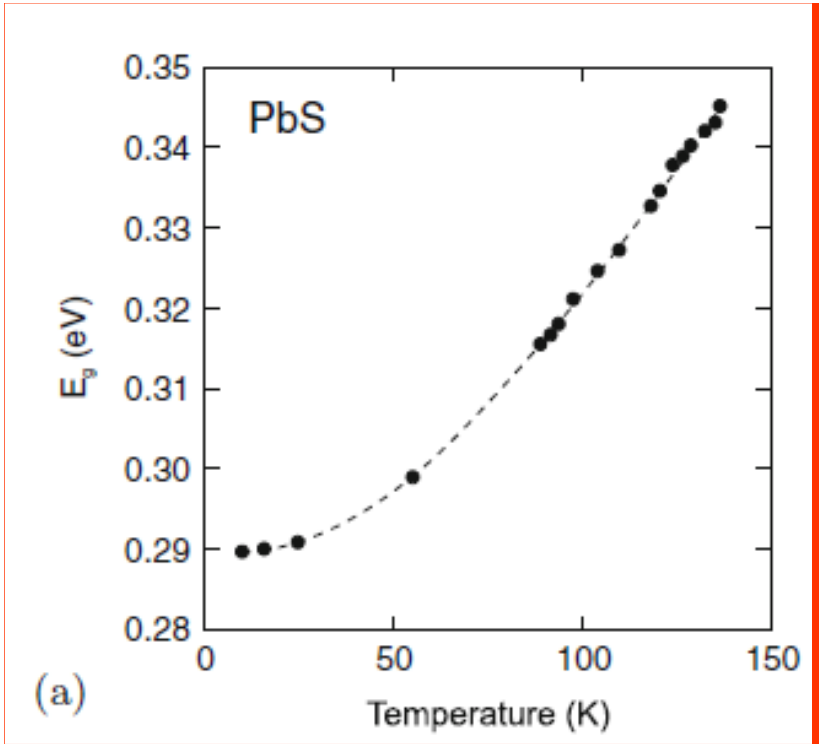

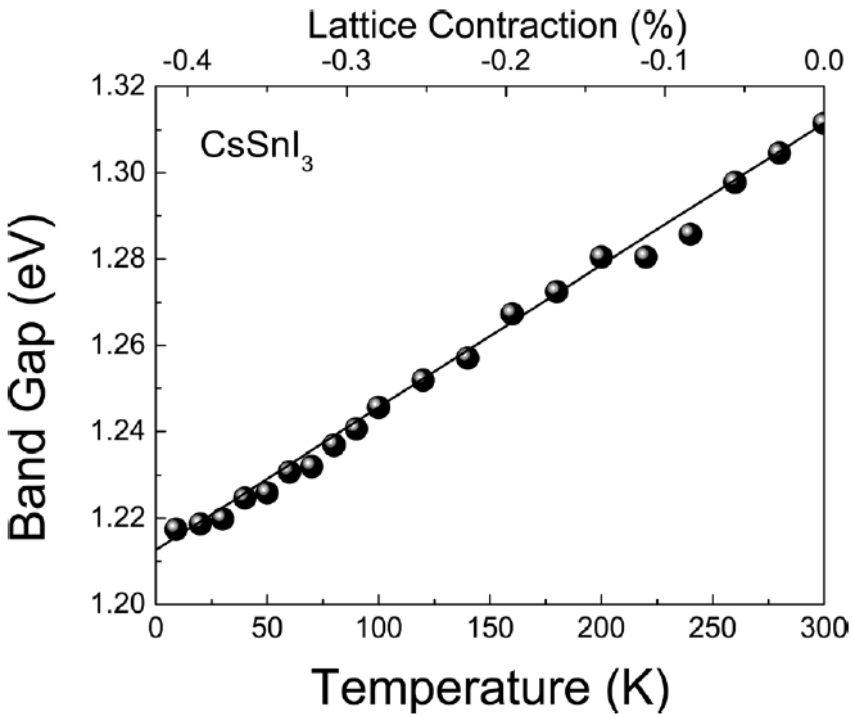

Fig. 6.21. (a) Band gap vs. temperature for PbS.

FIG. 2. Band gaps of $CsSnI_3$ at various temperatures deduced from photoluminescence spectra (solid spheres with bottom axis) and the bandgap variation with lattice contraction obtained from first-principles calculations (solid line with top axis). The top axis is the relative lattice contraction, $\Delta a/a_0$, where a_0 is the lattice constant at room temperature.

1.5 Semiconductor Alloy (2.4.2)

◆ Unlike metals or ceramics where alloying is primarily aimed at engineering mechanical behaviors, forming semiconductor alloys concerns achieving specific optical or electronic properties.

◆optoelectronic properties are primarily determined by the semiconductor **energy gap** and **band structure**.

◆ An additional point of difference is that alloying in other materials aims at controlled production of second phases or microstructures, while semiconductor alloys must be single phase to be useful.

◆ In semiconductors we are restricted to those alloys which form single phases with nearly perfect mixing.

◆ It is difficult to grow bulk single crystals, and nearly impossible to grow bulk single crystal alloys with adequately-controlled chemistry.

◆So, for most alloys, epitaxial growth is used for films.

◆ Therefore, the alloy must be designed for both optoelectronic properties and lattice constant.

➢“能带—晶格常数关系”原则

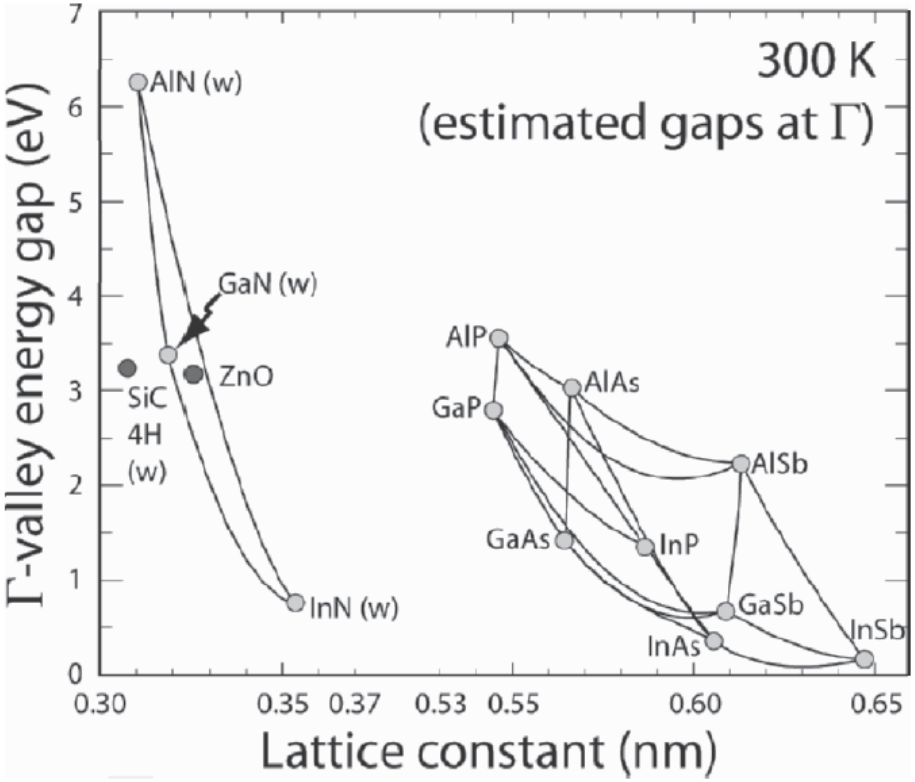

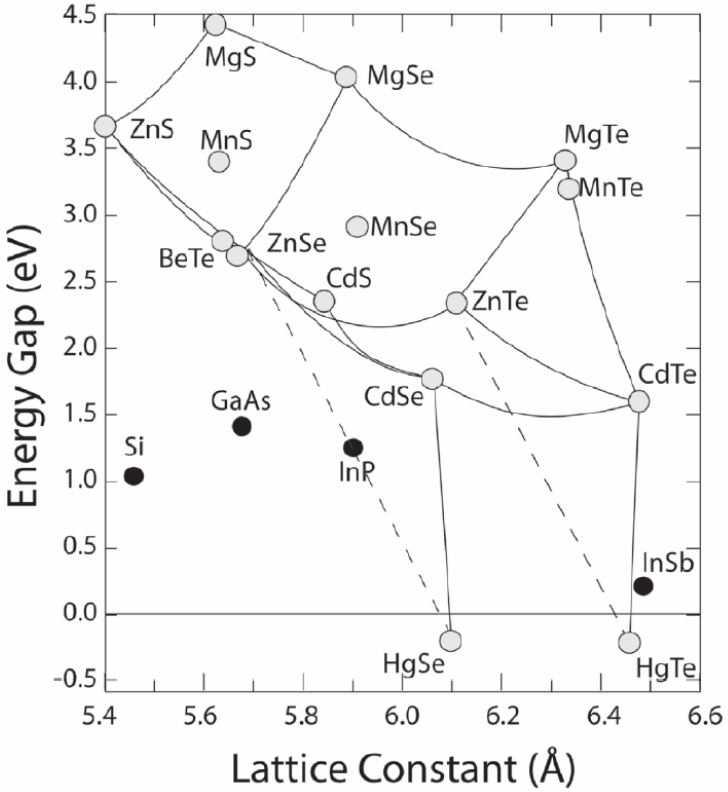

✓带宽可调范围大

✓晶型、晶格常数尽量接近

BAND GAP BOWING

In alloy semiconductors, the size of the band gap and the character of the band gap will depend on the composition. The dependence of the band gap on the ternary composition is mostly nonlinear and can usually be expressed with a bowing parameter b that is mostly positive. For a compound $A_xB_{1-x}C$ the band gap is written as

$$E_g(A_xB_{1-x}C) = E_g(BC) + x\,[E_g(AC) - E_g(BC)] - b\,x\,(1-x)\,. \qquad (6.29)$$

Alloy	Bowing Parameter (eV)			Alloy	Bowing Parameter (eV)		
	Γ	X	L		Γ	X	L
AlGaAs	-0.13	0.55	0	AlAsP	0.22	0.22	0.22
AlInSb	0.43			AlAsSb	0.8	0.28	0.28
AlInP	-0.48	0.38		AlPSb	2.7	2.7	2.7
GaInAs	0.48	1.4	0.33	GaAsP	0.19	0.24	0.16
GaInSb	0.41	0.33	0.4	GaAsSb	1.43	1.2	1.2
GaAlN	1.0			InAsSb	0.67	0.6	0.6
GaInN	2.4			GaAsN	120		

- 有何用途?

➢ 用途举例

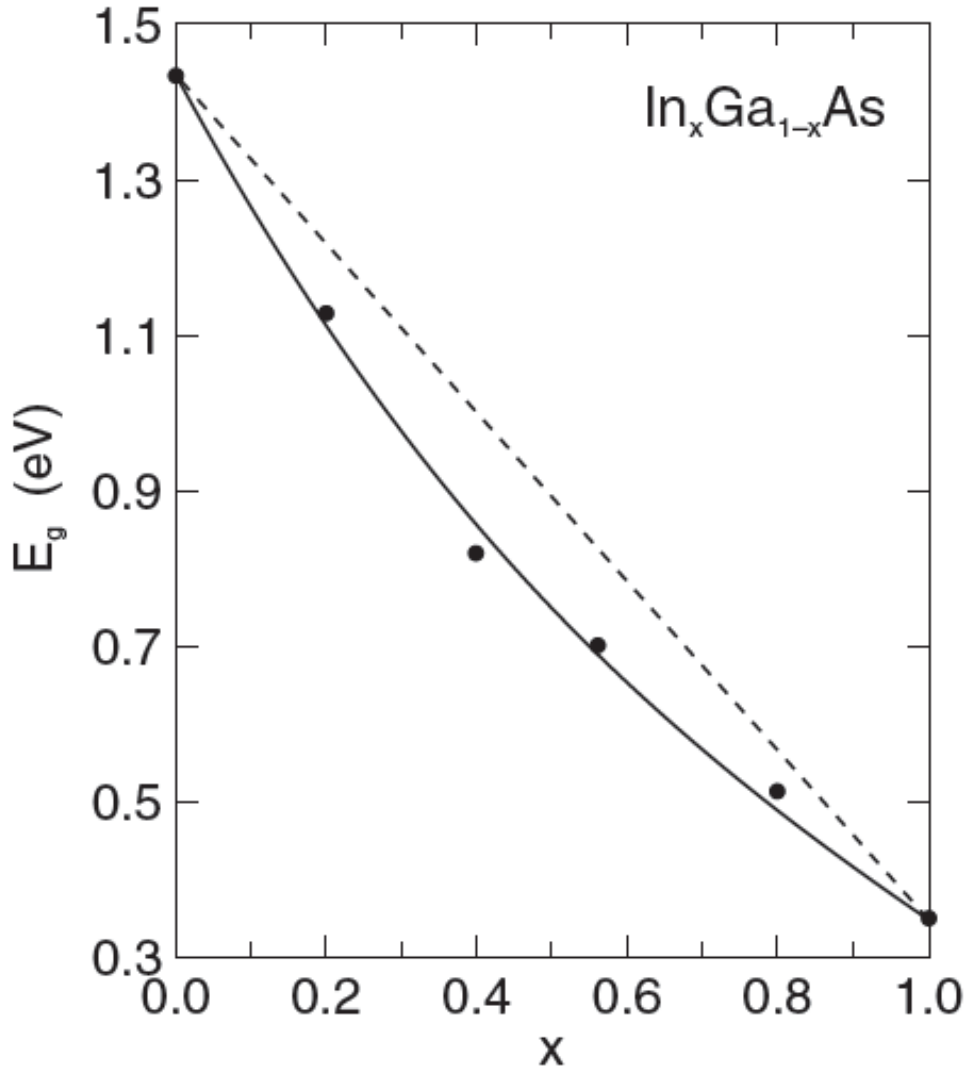

Band gap (at room temperature) of In*xGa1−xAs. The solid* *line is an interpolation with bowing (b = 0.6 eV) and the dashed line is the linear* interpolation. Data from [317].

作业：2019-09-

- GaP、AlP是典型的闪锌矿型间接带隙半导体，但AlGaInP四元半导体合金体系却是550-700 nm波段发光二极管的主要候选材料。

请用半导体能带理论、半导体合金理论知识解释原因。

二、 能带工程

Textbook, Page 53

- *Figures Show schematically the* ***band edge offsets*** *in the flat band condition for the types* of semiconductor heterojunctions.

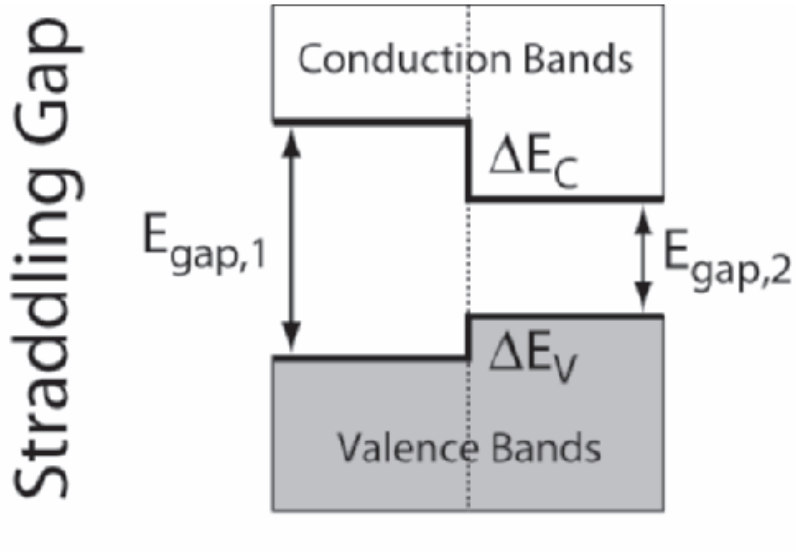

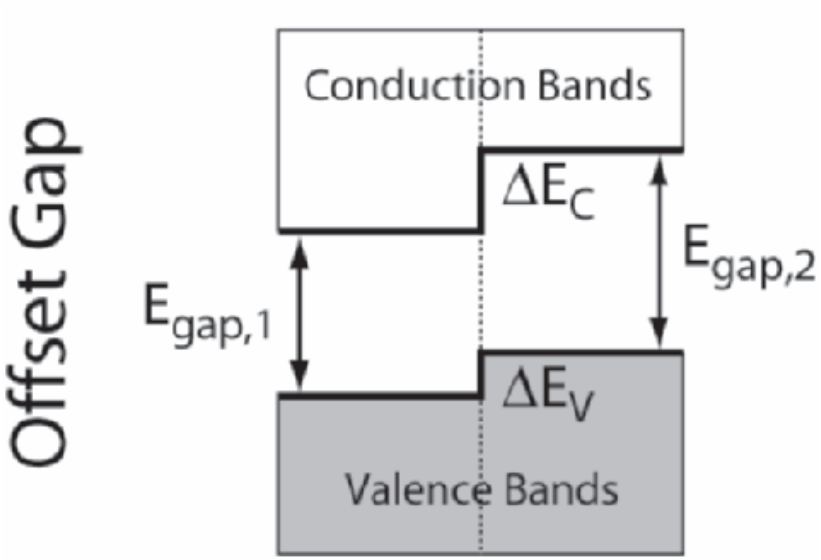

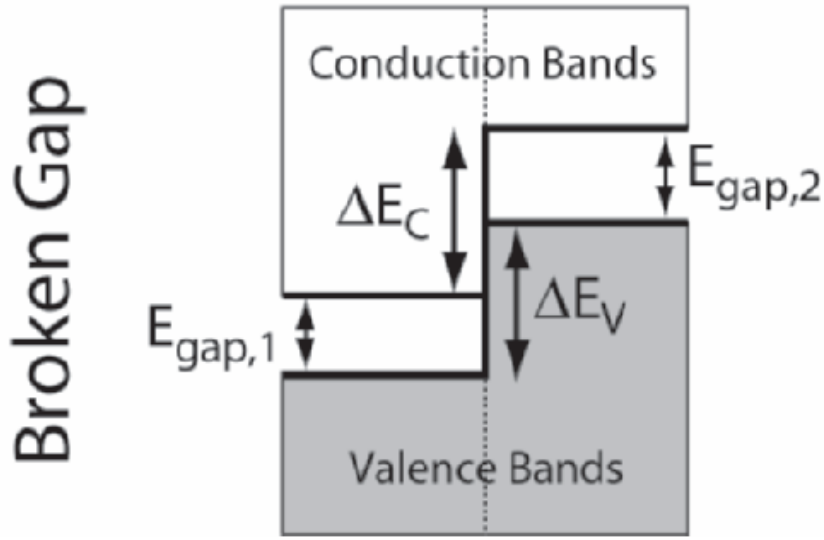

➢ supperlattice

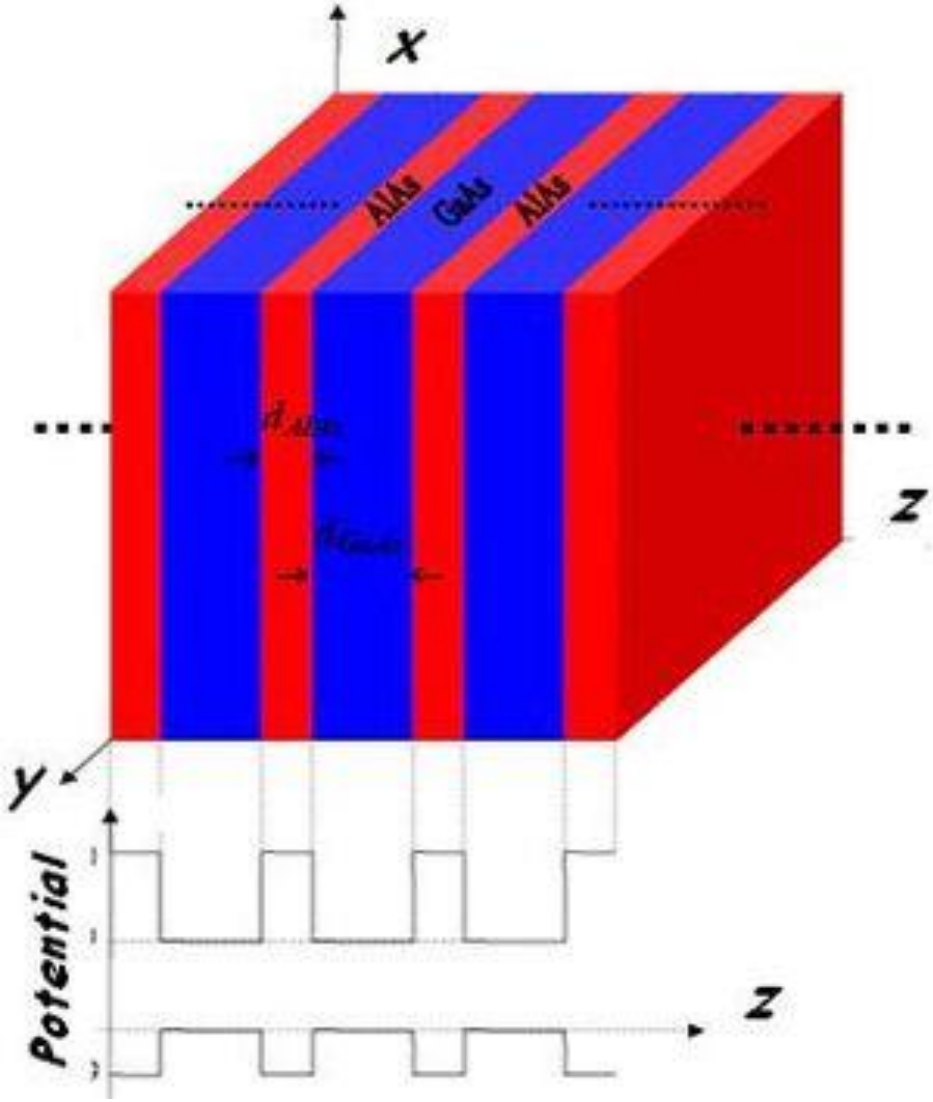

三、 有效质量

1、自由空间电子的能量E(*k*)

粒子性特征： 具有一定的质量m_0和运动速度$\boldsymbol{V}$（或动量$\boldsymbol{p}$）。

波动性特征： 电子的运动可以看成频率为ν、波矢为$\boldsymbol{k}$的平面波在波矢方向的传输过程。

$$\boxed{\text{波粒二象性}} \begin{cases} E = h\nu \\ p = \dfrac{h}{\lambda} = hk \end{cases}$$

其中 $h = 6.626 \times 10^{-34}$ J·s 称为普朗克常数

显然：$E(k)=E(-k)$

$$E=\frac{1}{2}m_0V^2=\frac{(hk)^2}{2m_0}$$

$$\frac{d^2E}{dk^2}=\frac{h^2}{m_0}\Rightarrow m_0=h^2\left(\frac{d^2E}{dk^2}\right)^{-1}$$

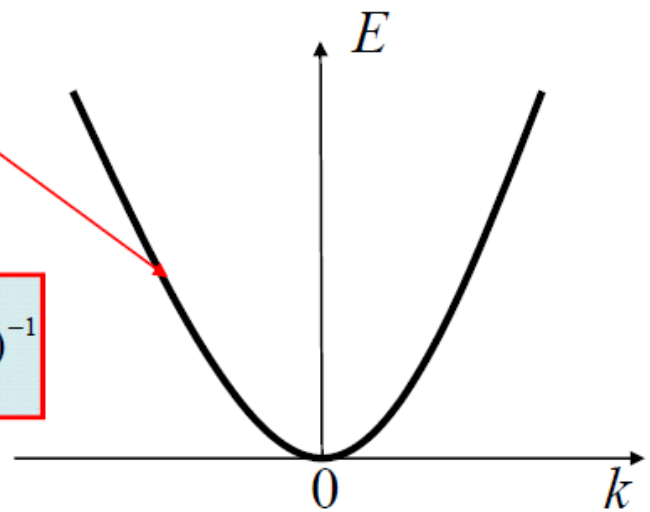

2、速度V(k)

对$E(k)$微分，得到：

$$\because E=\frac{(hk)^2}{2m_0}$$

$$\therefore \frac{dE}{dk}=h\frac{hk}{m_0}$$

$$V=\frac{p}{m_0}=\frac{hk}{m_0}=\frac{1}{h}\frac{dE}{dk}$$

3、加速度a

$$a=\frac{F}{m_0}$$

➢有效质量的定义及求法

把真空中自由电子的质量m_0，推广到半导体中的任一情况m*：有效质量

$$m^* = h^2\left(\frac{d^2E}{d\vec{k}^2}\right)^{-1}$$

有效质量定义式

当用有效质量描写晶体中的电子运动时，有：

$$a = \frac{F}{h^2}\frac{d^2E}{dk^2} = \frac{F}{m^*}$$

$$v = \frac{hk}{m^*}$$

小结：在引入有效质量后，描写晶体中电子运动的表达式在数学形式上与描写自由电子运动的完全一致。

有效质量的意义

电子在晶格中的运动时，外加作用力、晶体中带正电的离子和带负电的其他电子所产生的内力，都会对电子在晶格中的运动产生影响。**对于大多数情况的半导体的能带结构，导带底的电子和价带顶的空穴都能看作是符合牛顿力学的规范的经典粒子**，所以根据牛顿第二定律有：

$$F_{total} = F_{ext} + F_{\text{int}} = ma$$

但事实上是，很难一一考虑晶体中粒子所受的内力，所以将上式改写为：

$$F_{ext} = m^{*} a$$

小结：有效质量m*是一个将量子力学结果与经典力学作用力结合起来的参数。它概括了粒子的质量与晶格中所有内力（正离子、电子）的作用效果，换句话说，是将内力和量子力学特性都归纳为有效质量来考虑。

3. 有效质量的特点

（1） 决定于材料

（2） 与能带的几何形状有关

内层：带窄，$\frac{d^2E}{dk^2}$ 小， m*大

外层：带宽，$\frac{d^2E}{dk^2}$ 大， m*小

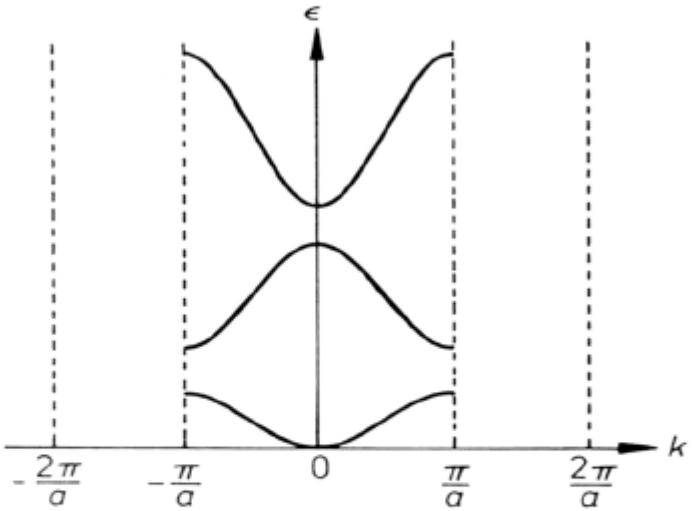

带重迭增大（带展宽大），*m** 就越小： 此时电子越容易加速，共有化运动的特征越明显。

（3） m*有正负之分，大小之分

当$E(k)$曲线开口向上时，$\frac{d^2E}{dk^2}$ >0， m*>0

当$E(k)$曲线开口向下时，$\frac{d^2E}{dk^2}$ <0， m*<0

导带底电子的 m*>0
价带顶电子的 m*<0

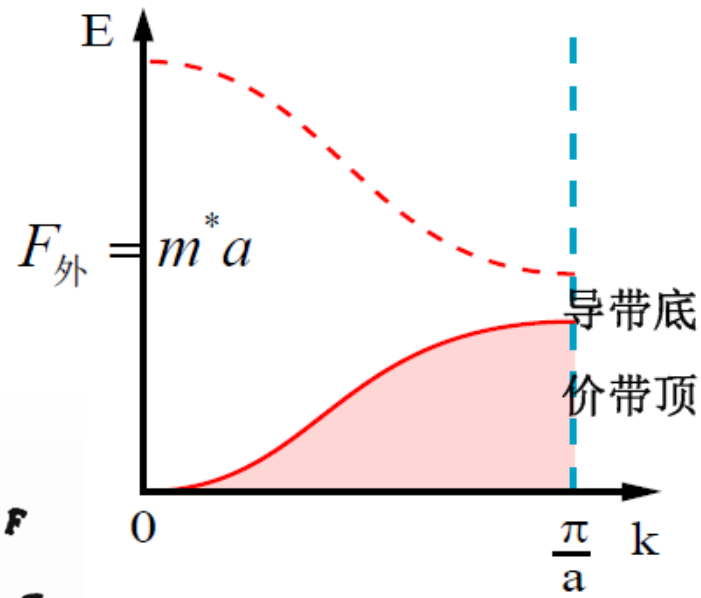

电子分布引起 m^*变化示意图

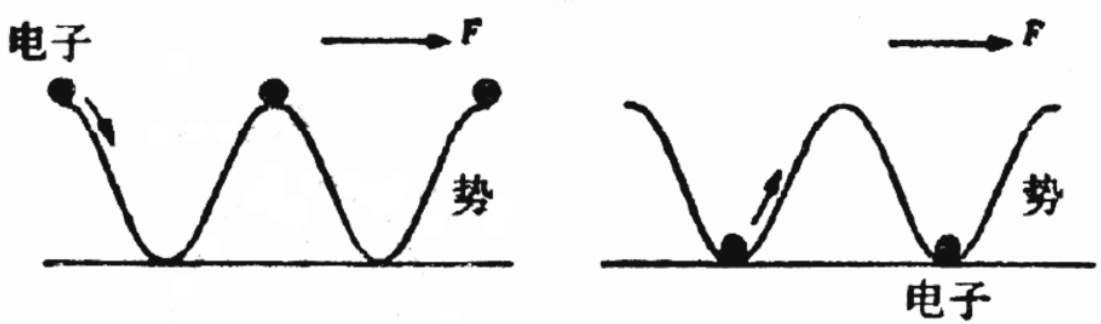

$M^*<M_0$; $M^*>M_0$

（4）对于导带底和价带顶的电子，有效质量恒定

m^*=常数，与自由电子在实空间中的运动相似